CODE	DESCRIPTION	POS.	GR.
592961A82	CONTROL PANEL ASSEMBLY	1	
273097A	ADHESIVE LABEL	2	G0299A
281933A82S	UNIT COVER	2	G0299A
281928A82	DISCHARGE AIR GRILLE	3	
281935A126	INSIDE FRONT	4	
281936A126	INSIDE BACK	6	
281931A72	FRAME / FILTER	7	
281932A126	CONDENSE TANK	8	
281927A82	DOWN BASE	9	
276112A	MF 5 CAPACITOR	10	
281926A126	TERMINAL BOARD COVER	11	
255605A70	POWER CABLE	12	
279320A	FAN ELASTIC HOLDER	13	
242350A	COVER SPRING	14	
275006A	6TS035DAA PANASONIC COMPRESSOR	14	
277559A	GASKET	14	
279392A	TEFLON BEARING	15	
575921A	COMPRESSOR CABLE ASSEMBLY	16	
277558A	KLIXON COVER	17	
279397A	HANDLE PLUG O.U.	18	
281502A	CYLINDRICAL VIBRATION-DAMPING	19	
255736A	MAIN CABLE	20	
276210A	3 POLES TERMINAL BOARD	21	
281934A82	BACK	22	
281930A126	MOTOR HOLDER	23	
276299A	TANGENTIAL FAN	24	
275004A	MOTOR	25	
281921A82	FLOATING HOLDER	26	
281923A69	FLOATING	27	
256440B	EVAPORATING COIL	28	
281922A82	TANK BLOCKER	29	
281580A	DRAIN PIPE	30	
276009A	83.161.9.SP4136 MICROSWITCH	31	
281920A69	CONDENSE TANK	32	
256441A	CONDENSER COIL	33	
281941A72	EVAPORATOR COMB	35	

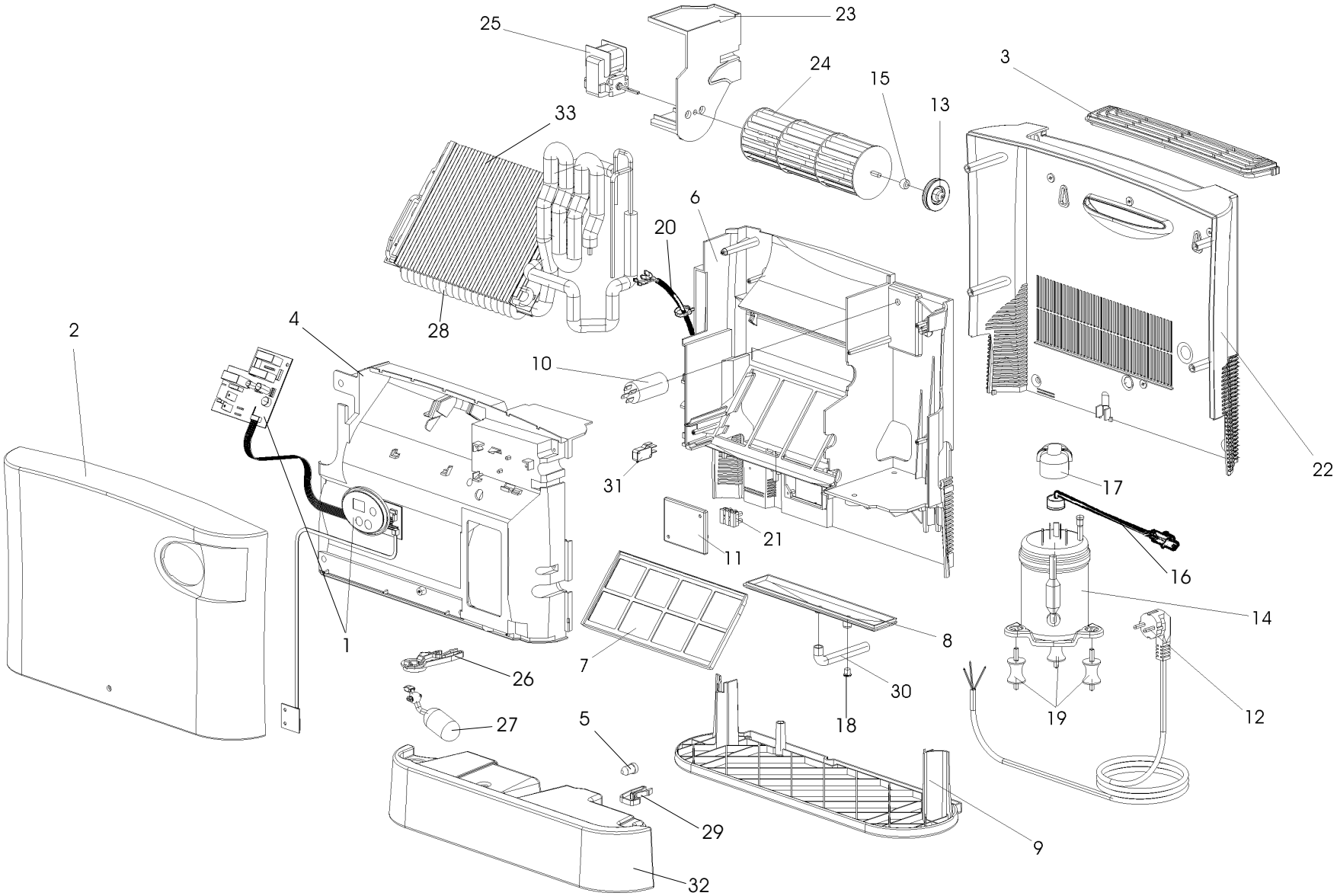

OLIMPIA SPLENDID
Via G. Rossa 1-3
Gualtieri (R.E.)

.SECCOASCIUTTO

Agg. Novembre 2003 - RIF: 057,00